Marchio / Brand ZUCCHETTI

Classe / Class LAB

BRIM

ZBR381 Miscelatore monocomando lavabo. / Single lever basin mixer.

WATER SAVING



Miscelatore monocomando lavabo con aeratore, flessibili di collegamento. Senza scarico.
Water Saving - portata d'acqua uguale o inferiore a 6 l/min.

Single lever basin mixer with aerator, flexible tails. Without pop-up waste.
Water Saving - water flow rate of 6 l/min or less.

Marchio / Brand ZUCCHETTI

Classe / Class LAB

BRIM

ZBR381

Finiture / Finishes



Cromo / Chrome



C3

Nickel Spazzolato / Brushed Nickel



N6

Nero opaco / Matt black

Note / Notes

BRIM

ZBR381 Disegno Complessivo / Overall Drawing

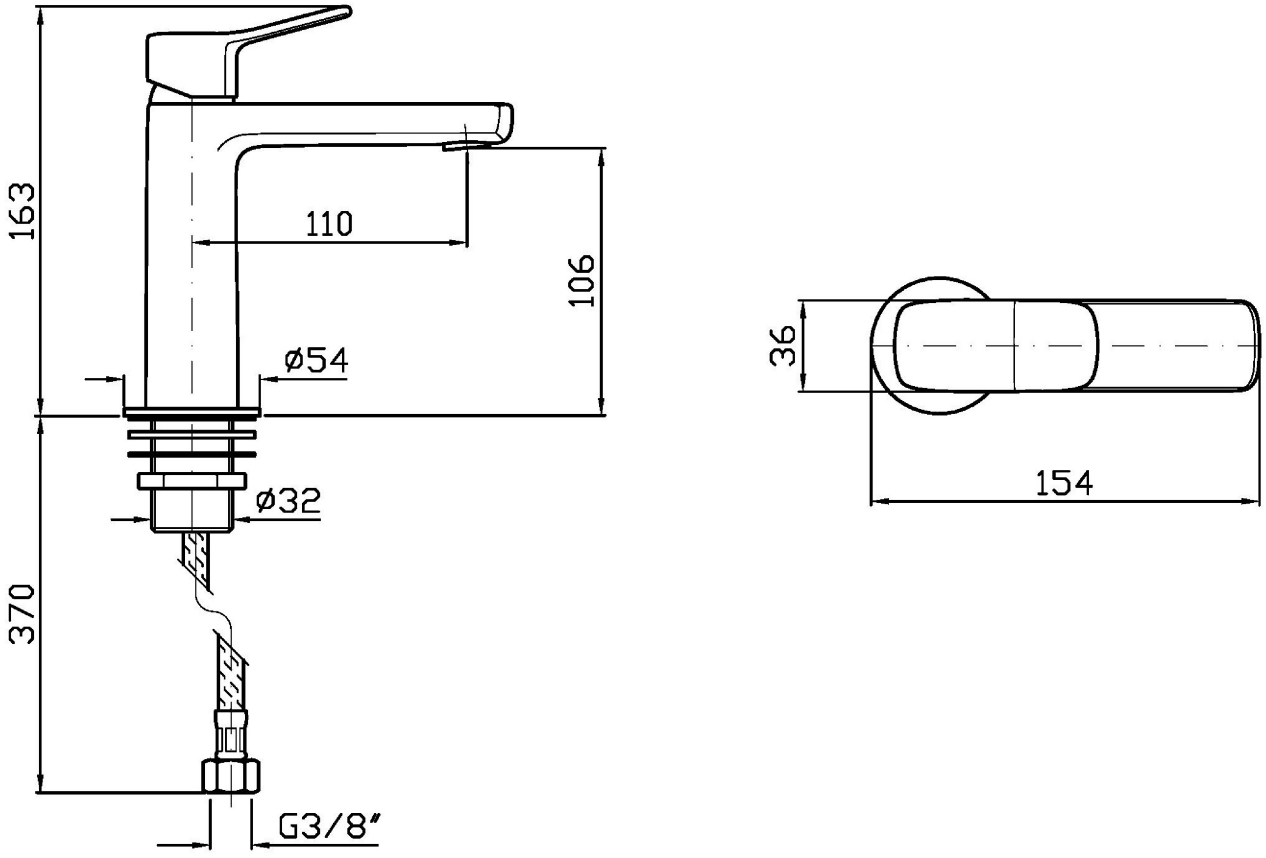

Marchio / Brand ZUCCHETTI

Classe / Class LAB

BRIM

ZBR381 Esplosi / Exploded

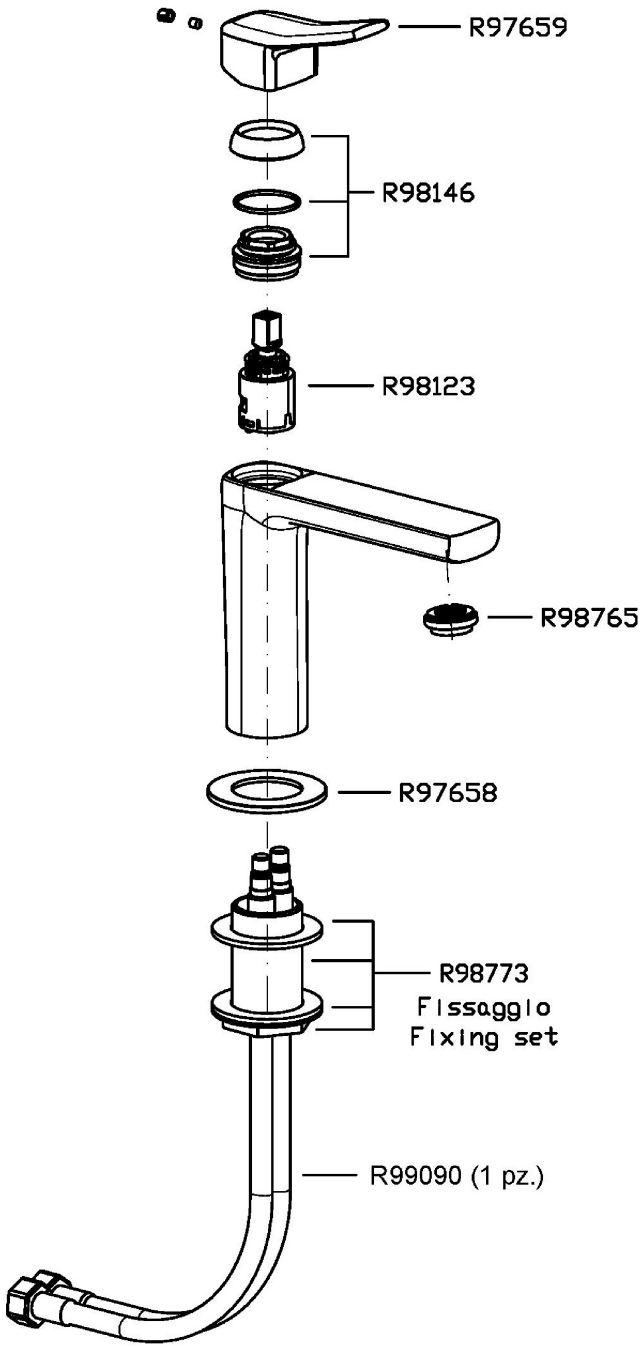

BRIM

ZBR381 Portate / Flowrates (lt/min)

PRESSIONE PRESSURE	1 BAR	2 BAR	3 BAR	4 BAR	5 BAR
P1 LAVABO BASIN	**3,6**	**4,3**	**4,7**	**5**	**5**
P2					
P3					
P4					
P5					

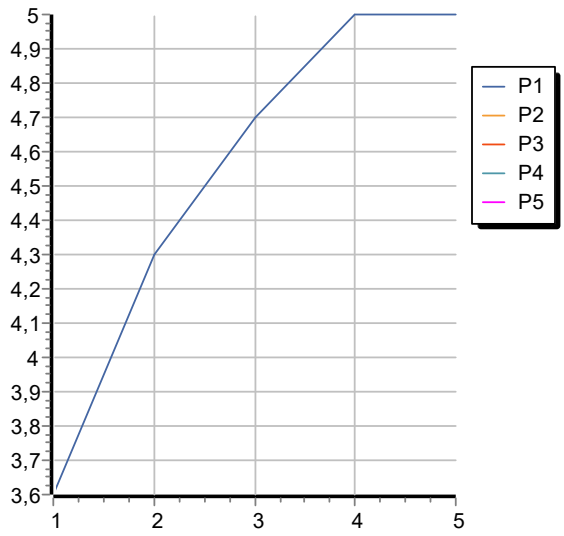

BRIM

ZBR381 Pesi e Misure / Weights and Sizes

Peso (Kg) Weight (lb)	1,60 (Kg)	3,53 (lb)
Volume test (dc3) - (in3)	4,05 (dc3)	247,15 (in3)
h (mm) - (in)	70,00 (mm)	2,76 (in)
L1 (mm) - (in)	150,00 (mm)	5,91 (in)
L2 (mm) - (in)	385,00 (mm)	15,16 (in)

