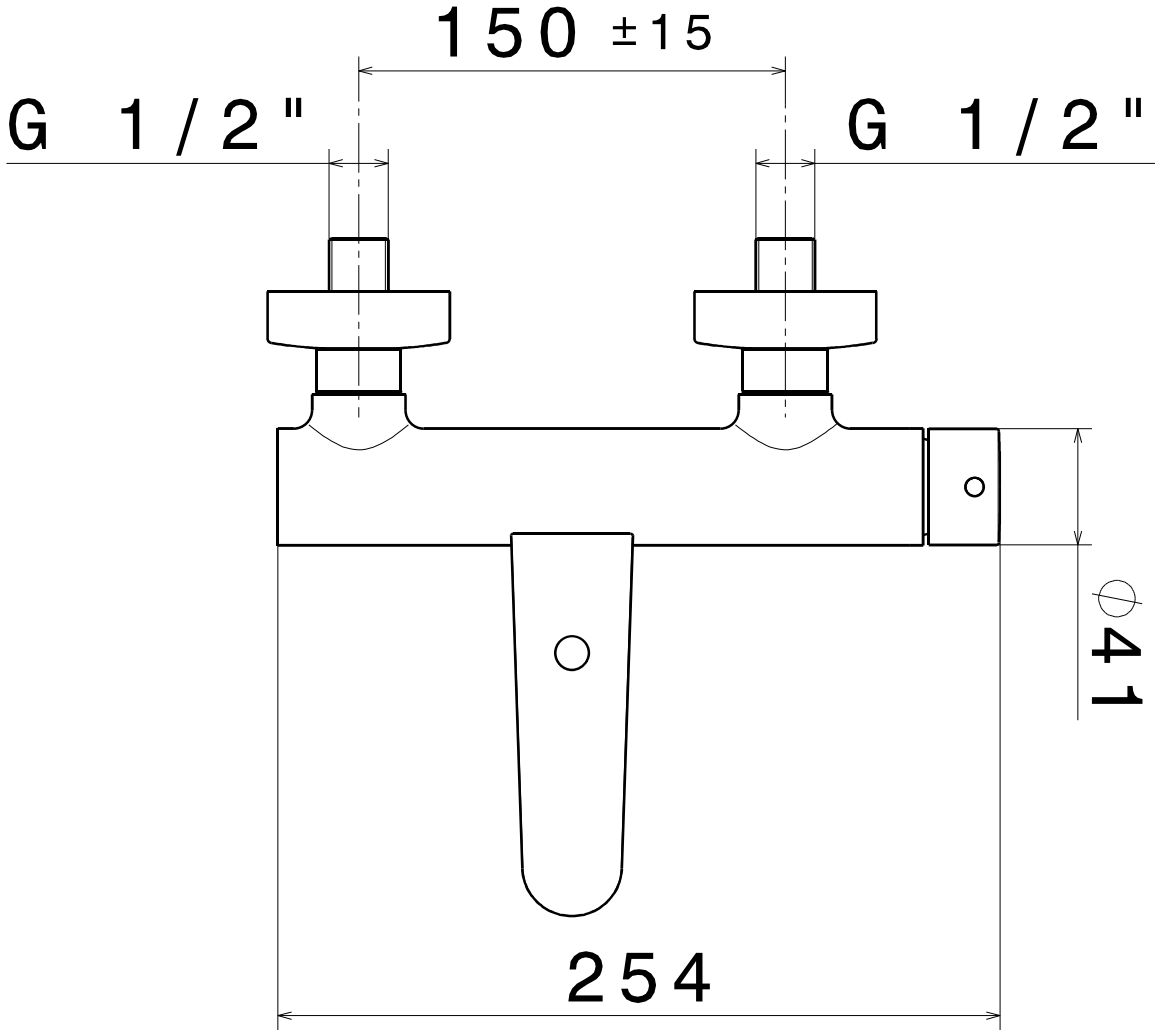
150 ±15
G 1/2"
G 1/2"
⌀41
254

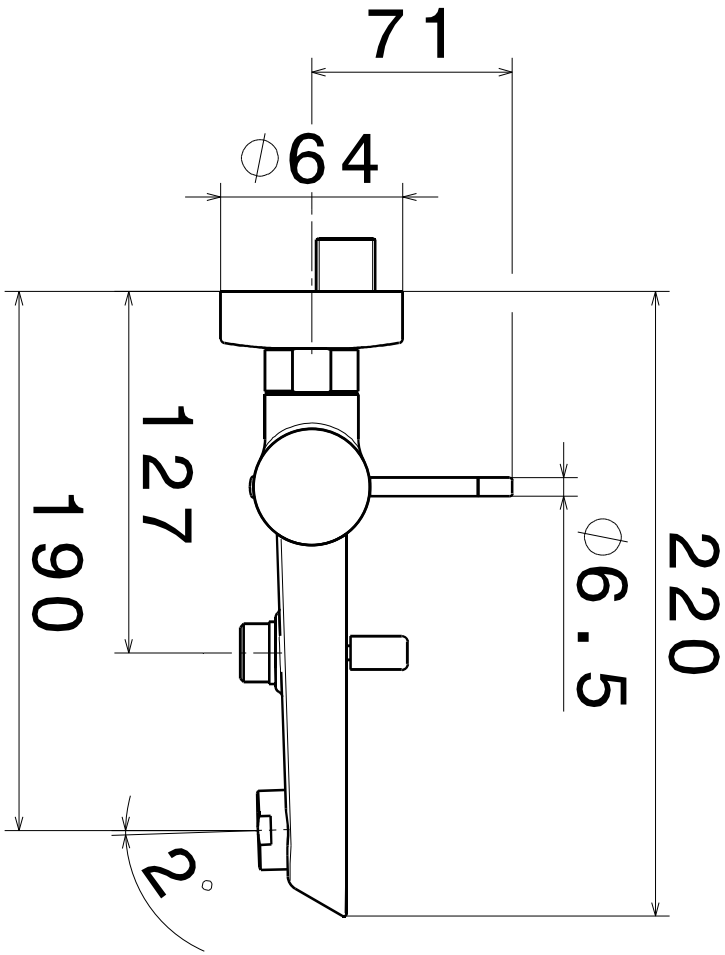
71
⌀64
190
127
⌀6.5
220
2°

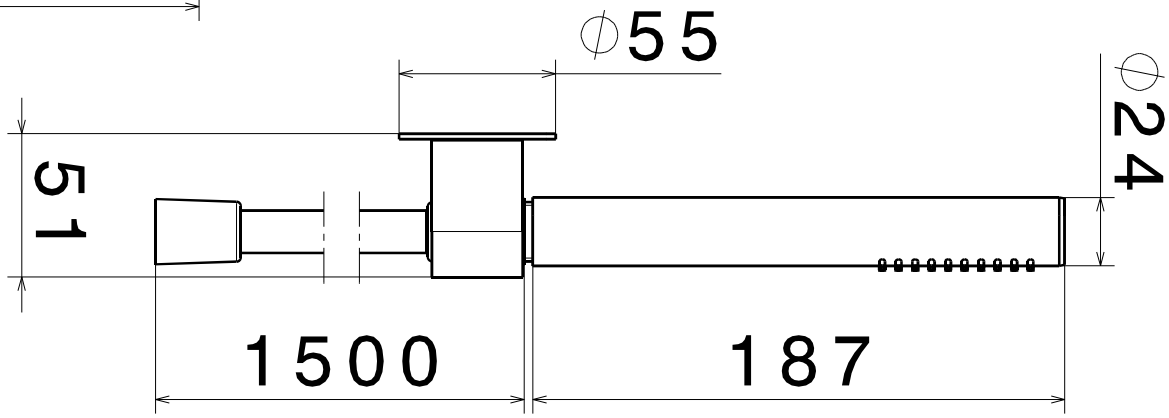
⌀55
⌀24
51
1500
187